SPIROL®

COMPRESSION LIMITERS



THE FUNCTION OF A COMPRESSION LIMITER

The primary function of a Compression Limiter is to provide and maintain joint integrity of a plastic assembly. Compression Limiters are designed to protect the plastic components of an assembly from the compressive loads generated by the tightening of bolts, thereby assuring continued integrity of the bolted connection.

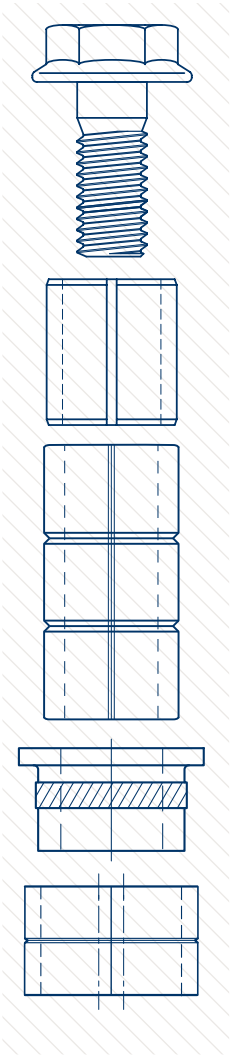

In practice, the Compression Limiter should be slightly shorter than the thickness of the plastic host. As the bolt is tightened the plastic compresses and the stress in the plastic increases until the head of the bolt, or washer if one is used, comes into contact with the Compression Limiter. Thereafter, the Compression Limiter and plastic will compress together at a rate controlled by the limiter. The Compression Limiter will absorb additional clamping loads without further significant compression or increased stress in the plastic material.

A properly designed bolted joint must meet the following criteria:

- The head of the bolt, or washer if one is used, should always seat against both the plastic host and the Compression Limiter under load. This will prevent deterioration of the bolted joint resulting from diminished clamping load due to plastic creep.
- The rated proof load of the Compression Limiter should be equal to or greater than the proof load of the bolt to assure that the Compression Limiter will not yield prior to the bolt under excessive clamping loads.
- The mating component that the Compression Limiter seats against should be strong enough to withstand the localized compressive stresses generated by the clamping force.
- The clearance between the maximum bolt diameter and the minimum installed inside diameter of the Compression Limiter should be sufficient to compensate for expected assembly tolerances.

Standard **SPIROL® COMPRESSION LIMITERS** meet these criteria.

Application Engineering Support

It is imperative that the proper Compression Limiter be designed into each application based on the specific requirements for that assembly, and that the plastic host be designed appropriately to ensure that bolted joint integrity is maintained throughout the life of the assembly.

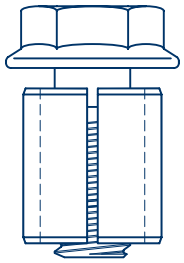

Each application has unique considerations such as:

- The specific plastic type in which the Compression Limiter will be used
- Minimum and maximum thickness of plastic host
- Fastener size, strength and tightening torque
- Mating materials
- Corrosion resistance requirements
- Temperature requirements
- Installation method

This catalog provides useful information regarding design guidelines and specifications for assemblies that use Compression Limiters. In addition, SPIROL's Application Engineers will partner with your design team to determine the most appropriate Compression Limiter for your specific application.

Contact SPIROL for design assistance:
www.SPIROL.com

SPIROL'S COMPRESSION LIMITERS

SPIROL offers a range of both formed and machined Compression Limiters including split seam, molded in, oval and solid wall designs. All formed Compression Limiters, except the Series CL220, are zinc plated and have a supplementary coating of trivalent passivation and an organic sealant for corrosion resistance. This finish provides 144 hours to white corrosion, and 384 hours to red corrosion when salt spray tested in accordance with ASTM B117. SPIROL's Series CL220 Compression Limiters are coated with ArmorGalv®, a zinc alloy thermal diffusion coating complimented with two sealers that provides a minimum of 1000 hours corrosion resistance to red rust. Machined Limiters are manufactured from aluminum and brass, both of which have inherent corrosion resistant properties and thus do not require supplementary finishing. Each series of Compression Limiter is designed to meet specific proof loads and accommodate a variety of installation methods.

The clearance between the bolt and the inside diameter of the installed Compression Limiter is typically adequate to meet normal misalignment. The Compression Limiter's length should be designed to ensure it will bottom out against the surface under the bolt's head and mating component. The appropriate length and length tolerance is application dependent. While the standard tolerance is sufficient to meet most needs, verification is recommended. SPIROL's Applications Engineers are available to assist in this process. If it is determined that a special Compression Limiter is required, then a documented recommendation will be provided.

The following details the unique features for each standard series:

- **Series CL220 Split Seam:** The Series CL220 Compression Limiter is produced from high carbon steel and intended for post-mold installation. The spring force generated during installation provides self-retention in the assembly. The flexible diameter accommodates wide hole tolerances, and the gap is designed such that the parts will not interlock in the free state. Once installed, the CL220 provides a minimum clearance of 1mm around the bolt diameter to compensate for misalignment. The CL220 is the only standard Compression Limiter finished with a protective coating of ArmorGalv®, a zinc alloy thermal diffusion coating complimented with two sealers that provides 1000+ hours of salt spray protection for highly corrosive applications such as automotive, marine, mining and industrial manufacturing. Additional benefits of ArmorGalv® include no insignificant surfaces as the entire inner diameter (ID) of the Limiter receives full coating and protection. The CL220 is rated for use up to ISO Class 8.8 bolts. The CL220 offers the widest range of standard diameter and length combinations to accommodate a variety of application requirements.

- **Series CL200 Split Seam - Slim Profile:** Similar to the Series CL220, the CL200 Slim Profile Compression Limiter has a smaller inner diameter (ID) after insertion and a reduced overall profile with less clearance around the bolt. Once installed, the CL200 provides a minimum clearance of 0.5mm as compared to the larger minimum clearance of 1mm provided by the CL220. The CL200 is rated for use up to ISO Class 8.8 bolts.

- **Series CL350 Split Seam - Heavy Wall:** The CL350 was designed with a thicker wall for increased bearing surface when clamped against soft mating materials. Generous bolt clearance also aids in positional alignment when multiple Compression Limiters are used in an assembly. The CL350 is rated for use up to ISO Class 10.9 bolts.

- **Series CL400 Split Seam - Oval:** Produced from high carbon steel, the oval Series CL400 accommodates 2.25mm extra clearance on one axis, providing additional flexibility over round Compression Limiters for centerline and stack-up tolerancing. This split-seam oval Limiter is formed, and it is spring tension that provides positive retention in the hole. The forming manufacturing method yields substantial cost savings over machined and powdered metal products with similar features and characteristics. The CL400 is rated for use up to ISO Class 8.8 bolts.



SPIROL'S COMPRESSION LIMITERS



- **Series CL460 Molded-In - Oval:** The CL460 Series is similar to the oval Series CL400, but produced with a butted-seam so as to prevent plastic from entering the inner diameter during the molding process, and a radial groove to ensure positive retention within the hole. This series also accommodates 2.25mm extra clearance on one axis. The CL460 is rated for use up to ISO Class 8.8 bolts.

- **Series CL500 Molded-In:** The Series CL500 is produced from low carbon steel with a butted seam to prevent plastic from entering the inner diameter of the Compression Limiter during the molding process. This also provides an anti-rotation feature once in the assembly. The radial grooves provide axial retention. The CL500 is rated for use up to ISO Class 8.8/Grade 5 bolts.

- **Series CL6000 Precision Machined - Aluminum:** The Series CL6000 is machined from 2024 aluminum as this grade provides the best combination of strength, corrosion resistance, machinability and cost. Additional advantages of aluminum are that it is lightweight (1/3 the weight of brass), it is 40% stronger than brass, and it is lead free. These Limiters can be molded in or pressed into the assembly. The precision machined ID tolerance allows proper seating on the core pin when molding into the assembly. When pressed into the assembly, they are designed with a pilot that allows the part to stand freely in the hole prior to completing the installation. Once installed, the knurl provides retention within the hole. The CL6000 is rated for use up to ISO Class 10.9/Grade 8 bolts.

- **Series CL6100 Precision Machined - Headed Aluminum:** The CL6100 headed aluminum Compression Limiter is the same as the CL6000, with the addition of a head. The head provides extra bearing surface on the mating component when a flanged bolt or a washer is not used.

- **Series CL8000 Precision Machined - Brass:** The Series CL8000 is machined from 360 brass. Similar to the CL6000, the CL8000 can be molded in or pressed into an assembly. The applications for SPIROL's brass and aluminum Compression Limiters are very similar, however to accommodate the same class/grade bolt, the brass Limiters have a larger wall thickness due to the material's lower yield strength. While this increases the size and weight of the Limiter as compared to the CL6000, the thicker wall does provide more bearing surface for the mating component. The most common reason a designer may choose the CL8000 is for those applications that require a shift away from aluminum on the galvanic series chart to make the Limiter more noble. The CL8000 is rated for use up to ISO Class 10.9/Grade 8 bolts.

- **Series CL8100 Precision Machined - Headed Brass:** The CL8100 headed brass Compression Limiters are the same as the CL8000 with the addition of a head. Similar to the CL6100, the head provides extra bearing surface on the mating component when a flanged bolt or a washer is not used.

- **Series CL620 General Purpose - Aluminum:** The CL620 is designed for use in non-critical applications and industries with forgiving assembly requirements. Similar to the CL6000, the CL620 is manufactured from lightweight, lead-free aluminum, offered in a narrower size range with generous tolerances that enable highly efficient manufacturing. For applications that are highly automated with stringent tolerance requirements, or if a headed configuration is required, consider the standard CL6000/CL6100 lines.

STANDARD OFFERING BREAKDOWN & MATERIALS

SERIES	DIA. RANGE	INSTALL METHOD	MATERIAL		BOLT RATING		RETENTION FEATURE / ATTRIBUTES
			TYPE	GRADE	CLASS	GRADE	
CL220	M4 - M12	Press-In	B - High Carbon Steel	UNS G10700 / G10740 CS67S (1.1231) / CS75S (1.1248)	8.8	5	Radial Tension / ArmorGalv®
CL200	M4 - M8	Press-In			8.8	5	Radial Tension / Reduced Profile
CL350	M6 - M8	Press-In			10.9	8	Radial Tension / Heavy Wall
CL400	M6 - M8	Press-In			8.8	5	Radial Tension / Oval
CL460	M6 - M8	Mold-In			8.8	5	Radial Groove / Oval
CL500	M6 - M8 / #10 - 5/16	Mold-In	F- Low Carbon Steel	UNS G10060 / G10100 EN10139 DC04 (1.0338) / DC01 (1.0330)	8.8	5	Radial Groove / Round
CL6000	M3 - M10	Either Press-In or Mold-In	A - Aluminum	ASTM B211 2024 ISO AlCu4Mg1	10.9	8	Knurled / Solid Wall / Lightweight / Lead Free
CL6100							CL6000 w/ Head
CL8000			E - Brass	UNS C36000 EN 12164 CW603N CuZn36Pb3			Knurled / Solid Wall / Cathodic Alt. to Aluminum
CL8100							CL8000 w/ Head
CL620	M3 - M8		A - Aluminum	ASTM B211 2024 ISO AlCu4Mg1			Knurled / Solid Wall / Lightweight / Lead Free

Other diameters available upon request.

COMPRESSION LIMITER INSTALLATION TECHNOLOGY

Install one or multiple Compression Limiters simultaneously into various polymers, thermoplastics and/or thermosets. Options such as vision sensing for part presence, automatic fixture identification, customized rotary or linear fixture motion, password protection of HMI screens, keyed reset, status/indicator lights, audible fault alarm, and part marking can be added for enhanced productivity, heightened process control and error-proofing.



Model CM Manual Driver

Extremely versatile and easily adjustable to accommodate a myriad of applications.



Model CL Semi-Automatic Multi-Tip

Highly flexible platen-style machine with 228mm x 279mm (9" x 11") working area. Rotary indexer shortens assembly time. Full insertion sensing ensures quality. Interchangeable tooling facilitates changeover in minutes.



Model CP Pneumatic Installation Machine

An accurate and consistent method to install one or more Compression Limiters into plastic assemblies. Quick-change tooling adapts the platform to a variety of products within seconds.



Model CLX Semi-Automatic Multi-Tip

For larger assemblies and components outside the standard footprint of the Model CL. Equipped with a powered fixture slide. Working area is customized to specific application requirements.

SPIROL® DESIGN CONSIDERATIONS

Recommended Loading

The integrity of a bolted joint requires that all of the components in the load path be capable of sustaining for indefinite periods, under all environmental conditions, the fastening load initially applied. To do this, all components must be designed for a specific stress, and the fastener being used must be tightened to an appropriate level so as not to exceed the yield point (elastic limit) of any of the components. The reason that metal Compression Limiters are required is because plastic always exhibits stress and strain relaxation under even modest loads. When determining bolted joint characteristics, the following considerations should be evaluated:

- What type of load is really required? For example, does a given plastic flange really need a Class 12.9 cap screw to hold it in place?
- What are the strengths of the components in the joint?
- What will the Compression Limiter be seated against? If it is aluminum or plastic, then that may be the limiting feature.
- Is the bolt being threaded into an Insert? If so, is there adequate thread strength and contact area on the Insert to fully support the Compression Limiter?
- What torque should the bolt be tightened to? **SPIROL** recommends that the bolt load be 25% to 75% of proof load. Less than 25% and you risk not generating enough frictional retention within the threads. More than 75% and there is a chance, due to assembly variations, that the proof load of the bolt may be exceeded.
- How does torque relate to bolt load? Torque and actual clamping load are very dependant on materials and conditions. The theoretical formula provided on page 5 is only for reference. Actual torque applied must be determined by the end user and is dependant on a variety of factors such as materials and coatings of all the components in the joint as well as the method of applying the torque.

Recommended Tightening Torque

The integrity of the bolted joint requires that none of the components, including the bolt, be stressed beyond the elastic limit. SPIROL recommends a clamping load not to exceed 75% of the proof load of the bolt. The recommended torque values to produce this clamping load are provided on page 5.

Determination of Compression Limiter Length

Proper length specifications of both the Compression Limiter and the plastic component are crucial to the proper performance of the bolted joint. The recommended maximum length of the Compression Limiter is the minimum thickness of the plastic component. This assures that when the proper load is applied to the bolt two critical conditions will be met:

- The bolt will be in contact with the Compression Limiter, eliminating the possibility of creep.
- The plastic host will always have a small amount of compression applied.

The amount of compression on the plastic host will be at most the combined thickness and length tolerances of the two components and the amount of compressive deflection on the Compression Limiter. In reality, with good SPC and production controls, the actual compression will be much less.

Load Rating

SPIROL rates our Compression Limiters by matching the load required to compress the Limiter 2.5% of its nominal length to the clamp load of the nominal sized fastener. ***See Standard Offering Breakdown & Materials.***

Compression Limiters are rated by the load required to compress the Limiter to a defined, safe distance that meets the requirements of:

- Maintaining integrity of the Limiter, preventing rupturing or excessive swelling.
- Maintaining the integrity of the plastic host by keeping any localized compressive strains within generally accepted, safe limits.
- Maintaining the load of the fastener by preventing stress relaxation, thereby assuring the continued integrity of the bolted connection.

For all engineered thermoplastic materials used in durable manufactured products, allowing 3%-5% maximum compression has been determined to be a safe, conservative limit. Most plastics are perfectly safe being compressed 5%-7%; many even further. Plastics have the characteristic that they will very quickly exhibit stress relaxation in the areas of high compression eliminating the potential of stress cracking and allowing the Compression Limiter to take the fastener load.

SPIROL® BOLT SPECIFICATIONS

Typical tightening torque values to achieve recommended **Clamping Loads** are based on the following formula:

$$P = \frac{T}{D \times K}$$

Where:

D = nominal bolt diameter
K = torque-friction coefficient
P = bolt clamping load
T = torque
K_{Dry} = 0.2
K_{Lube} = 0.15

COMMON METRIC BOLTS PER ISO 898

THREADS	CLASS 5.8				CLASS 8.8				CLASS 10.9				CLASS 12.9			
	LOADS		TORQUE		LOADS		TORQUE		LOADS		TORQUE		LOADS		TORQUE	
	PROOF	CLAMP	DRY	LUBE	PROOF	CLAMP	DRY	LUBE	PROOF	CLAMP	DRY	LUBE	PROOF	CLAMP	DRY	LUBE
M3 X 0.5	1,910	1,430	0.9	0.6	2,920	2,190	1.3	1.0	4,180	3,140	1.9	1.4	4,880	3,660	2.2	1.6
M3.5 X 0.6	2,580	1,940	1.4	1.0	3,940	2,960	2.1	1.6	5,630	4,220	3.0	2.2	6,580	4,940	3.5	2.6
M4 X0.7	3,340	2,500	2.0	1.5	5,100	3,850	3.1	2.3	7,290	5,450	4.4	3.3	8,520	6,400	5.1	3.8
M5 X 0.8	5,400	4,050	4.0	3.0	8,230	6,150	6.2	4.6	11,800	8,850	8.8	6.6	13,800	10,350	10.3	7.8
M6 X 1	7,640	5,750	6.9	5.2	11,600	8,700	10.4	7.8	16,700	12,550	15.1	11.3	19,500	14,650	17.6	13.2
M8 X 1	14,900	11,200	17.9	13.4	22,700	17,000	27.2	20.4	32,500	24,400	39.0	29.3	38,000	28,500	45.6	34.2
M8 X 1.25	13,900	10,400	16.6	12.5	21,200	15,900	25.4	19.1	30,400	22,800	36.5	27.4	35,500	26,600	42.6	31.9
M10 X 1	24,500	18,400	36.8	27.6	37,400	28,100	56.2	42.1	53,500	40,100	80.2	60.2	62,700	47,000	94.0	70.5
M10 X 1.25	23,300	17,500	35.0	26.3	35,500	26,600	53.2	39.9	50,800	38,100	76.2	57.2	59,400	44,600	89.2	66.9
M10 X 1.5	22,000	16,500	33.0	24.8	33,700	25,300	50.6	38.0	48,100	36,100	72.2	54.2	56,300	42,200	84.4	63.3
M12 X 1.25	35,000	26,300	63.1	47.3	53,400	40,100	96.2	72.2	76,400	57,300	137.5	103.1	89,300	67,000	160.8	120.6
M12 X 1.5	33,500	25,100	60.2	45.2	51,100	38,300	91.9	68.9	73,100	54,800	131.5	98.6	85,500	64,100	153.8	115.4
M12 X 1.75	32,000	24,000	57.6	43.2	48,900	36,700	88.1	66.1	70,000	52,500	126.0	94.5	81,800	61,400	147.4	110.5

COMMON INCH BOLTS PER SAE J429

THREADS	GRADE 2				GRADE 5				GRADE 8			
	LOADS		TORQUE		LOADS		TORQUE		LOADS		TORQUE	
COARSE	PROOF	CLAMP	DRY	LUBE	PROOF	CLAMP	DRY	LUBE	PROOF	CLAMP	DRY	LUBE
#4-40 *	330	250	5.6	4.2	510	380	8.5	6.4	720	540	12.1	9.1
#6-32 *	500	375	10.4	7.8	770	580	16.0	12.0	1,090	820	22.6	17.0
#8-32 *	770	575	18.9	14.1	1,190	895	29.4	22.0	1,680	1,260	41.3	31.0
#10-24 *	960	720	27.4	20.5	1,480	1,110	42.2	31.6	2,100	1,575	60.0	45.0
1/4-20	1,750	1,310	65.5	49.0	2,700	2,025	101.0	76.0	3,800	2,850	143.0	107.0
5/16-18	2,900	2,200	138.0	103.0	4,450	3,340	209.0	157.0	6,300	4,725	295.0	221.0
3/8-16	4,250	3,200	240.0	180.0	6,600	4,950	371.0	278.0	9,300	7,000	525.0	394.0
FINE	PROOF	CLAMP	DRY	LUBE	PROOF	CLAMP	DRY	LUBE	PROOF	CLAMP	DRY	LUBE
#4-48 *	360	270	6.0	4.5	560	420	9.4	7.1	790	600	13.4	10.1
#6-40 *	550	410	11.3	8.5	860	645	17.8	13.4	1,210	910	25.1	18.8
#8-36 *	800	600	19.7	14.8	1,250	940	30.8	23.1	1,760	1,320	43.3	32.5
#10-32 *	1,100	825	31.4	23.5	1,700	1,275	48.5	36.3	2,400	1,800	68.5	51.5
1/4-28	2,000	1,500	75.0	56.5	3,100	2,325	116.0	87.0	4,350	3,260	163.0	122.0
5/16-24	3,200	2,400	150.0	113.0	4,900	3,675	230.0	172.0	6,950	5,210	326.0	244.0
3/8-24	4,800	3,600	270.0	202.0	7,450	5,600	420.0	315.0	10,500	7,900	593.0	444.0

STANDARD FASTENER RATING: STRESS UNDER PROOF LOAD	
ISO Class 5.8	380 MPa
ISO Class 8.8	580 MPa
ISO Class 10.9	830 MPa
ISO Class 12.9	970 MPa
SAE Grade 2	55,000 psi
SAE Grade 5	85,000 psi
SAE Grade 8	120,000 psi



Notes:

* Inch sizes are not directly covered by SAE J429, but are calculated appropriately.

- Calculations are based on using bolt proof loads per SAE J429 and ISO 898 respectively.
- Clamp load in calculation is based on approximately 75% of the proof load for each bolt. **SPIROL** strongly recommends not to exceed 75% of proof load. If the bolt is torqued all the way to proof, the bolt will fail.
- Metric thread torque is N•m and load is N.
- Inch thread torque is in•lbs and load is lbs.
- Torque values shown are for clamp load.
- Actual loads developed by a specified torque value can vary by ±25%.

Plastic Host Design

Although the Split Seam Compression Limiters have a broken edge, this is kept to a minimum in order to maintain the maximum bearing surface area. Accordingly, it is recommended that a radius be molded as a lead-in to the hole in the plastic component to facilitate insertion. This radius is not necessary for Solid Wall Compression Limiters as the pilot is smaller than the hole. The hole should taper within the recommended hole size for the length of the Compression Limiter. Hosts for Split Seam Compression Limiters must be within the hole tolerance for more than 60% of the plastic thickness with at least 4mm (.156") of engagement. The hole size should not fall below the minimum recommended diameter in order to prevent the seam of the Limiter from completely closing upon insertion. Hosts for Solid Wall Limiters must be entirely within the recommended hole diameter. *(See (A) in Diagram 1)*

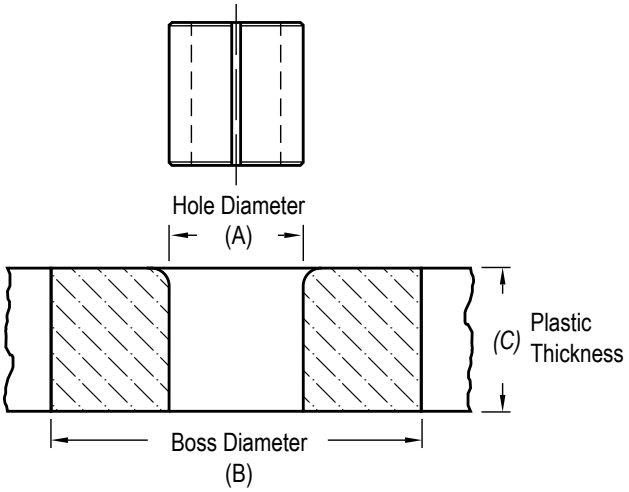

Diagram 1

See Page 7 for Host Thickness Design Guidelines

Generally the boss diameter is two (2) times the Compression Limiter diameter. The wall thickness has to be enough to avoid bulging or cracking when pressed-in cold, and for boss diameters to be strong enough for plastic compression when assembling the bolt. Poor knit lines will cause cracking failures.

Some Compression Limiters may require larger boss diameters and/or wall thickness to withstand the greater stresses induced during installation. For Solid Wall Compression Limiters, installing while the plastic is still warm from the molding process generally reduces this need.

Mating Component Material

The clamping load of the bolt is transferred to the mating component through the Compression Limiter. It must be evaluated whether the material of the mating component is strong enough to withstand the clamping force of the bolt. The stress imparted onto the mating component can be calculated by dividing the clamping load applied to the Compression Limiter by the cross sectional area of the Compression Limiter. If this stress exceeds the yield strength of the mating component material, localized permanent deformation may occur, resulting in a loss in clamping load.

Cost-Effective Fastener Selection

Designers should be prudent about not choosing a bolt class that is too strong for the application and ensuring that the proper tightening torque is applied during the assembly process. A higher bolt class requires a stronger Compression Limiter and potentially stronger mating material. Each adds to the total cost of the assembly. When increased bearing surface at the mating junction is required, Designers should consider selecting either a flange head bolt or including a washer rather than investing in a headed Compression Limiter. In this situation, there is a trade-off between cost and ease of assembly. Flanged bolts and washers cost much less than the added expense of a headed Compression Limiter. In addition, non-headed Compression Limiters are easier to feed.

Selecting the Most Cost-Effective Compression Limiter

Each standard series of Compression Limiters will affect the overall cost of the assembly in different ways. SPIROL Engineering will assist in the determination of which type of Compression Limiter is best suited to meet the performance and installation requirements that results in the lowest total cost of the assembly.



Allowable Compression of the Plastic Component

For most commonly used molded plastics, it is difficult to determine a specific maximum amount that they can be compressed in a short period of time. There are too many variables involved to make a specific calculation. Such features as the specific plastic, filler, mold design, wall thickness, and stress concentrations all impact the durability of the plastic. As a general guideline, 3%-5% compression of thermoplastic materials is reasonable. Over a short period of time the plastic will usually exhibit stress relaxation, thereby alleviating the compressive load on the plastic and allowing the Compression Limiter to maintain joint integrity. Stated in **formula (1)** below:

$$(1) \quad d_P = T_{max} - L_{min} + d_C$$

Where d_P should typically be less than 5% of T_{max}

Where:

- d_P = Required deflection of the plastic component, in units of length.
- T_{max} = Maximum thickness of the plastic component, in units of length.
- L_{min} = Minimum length of the Compression Limiter, in units of length.
- d_C = Deflection of the Compression Limiter under load, in units of length.

Deflection of the Compression Limiter

Deflection of the Compression Limiter under bolt load can be calculated using **formula (2)** below:

$$(2) \quad d_C = \frac{F_B \times L_C}{A_C \times E_C}$$

Where:

- d_C = Deflection of the Compression Limiter under load, in units of length.
- F_B = Compressive force generated by the bolt or fastener, in units of force.
- L_C = Nominal length of the Compression Limiter, in units of length.
- A_C = Cross sectional area of the Compression Limiter, in units of area.
- E_C = Modulus of Elasticity (Young's Modulus) of the material of the Compression Limiter, in units of force per area. ***See Table 2.***

Force to Seat the Bolt on the Compression Limiter

It is important to always assure that the bolt is seated securely against the Compression Limiter. While proportionally plastic is much more compressible than the Compression Limiter, in the initial assembled state the plastic will be nominally thicker than the length of the Compression Limiter. With the use of flanged bolts or large washers, significant surface area of the plastic can be put under compression, generating high loads. Therefore, it is necessary to calculate the capability of the bolt to compress the plastic and seat against the Compression Limiter in the worst case scenario. **Formula (3)** shows how to calculate the force required to seat the bolt.

$$(3) \quad F_B = \frac{(T_{max} - L_{min}) \times E_P \times A_P}{T_{max}}$$

$$\text{Where } A_P = \frac{\pi \times (\varnothing_2^2 - \varnothing_1^2)}{4}$$

Where:

- F_B = Compressive force generated by the bolt or fastener, in units of force.
- T_{max} = Maximum thickness of the plastic component, in units of length.
- L_{min} = Minimum length of the Compression Limiter, in units of length.
- E_P = Modulus of Elasticity (Young's Modulus) of the plastic component, in units of force per area.
- A_P = Area of the plastic component being placed in compression by the bolt, in units of area.
- $\varnothing_1$ = Minimum hole diameter of the plastic component, in units of length.
- $\varnothing_2$ = Maximum diameter of the portion of the bolt or washer that will be in contact with the plastic, in units of length.

The resultant F_B should be in the range of 75% or less of the proof load of the selected bolt, thereby assuring that sufficient compression is applied to the Compression Limiter after the plastic stress has relaxed.

Material	psi	MPa
Carbon Steel	30,000,000	206,000
Aluminium	10,000,000	69,000
Brass	14,100,000	97,000

Table 2 - Modulus of Elasticity for Common Materials

Note: *Compressive strain is an estimated value. Factors such as the rigidity of the plastic host, material, length to diameter ratio of the Compression Limiter, wall thickness, material type, and level of work hardening all affect the actual strain in the Limiter under actual compressive loads in the application. For assistance on determining the most appropriate Compression Limiter for your assembly, please contact SPIROL for complimentary Application Engineering support.*

SPIROL® DESIGN GUIDELINES

Ideal Bolted Joint

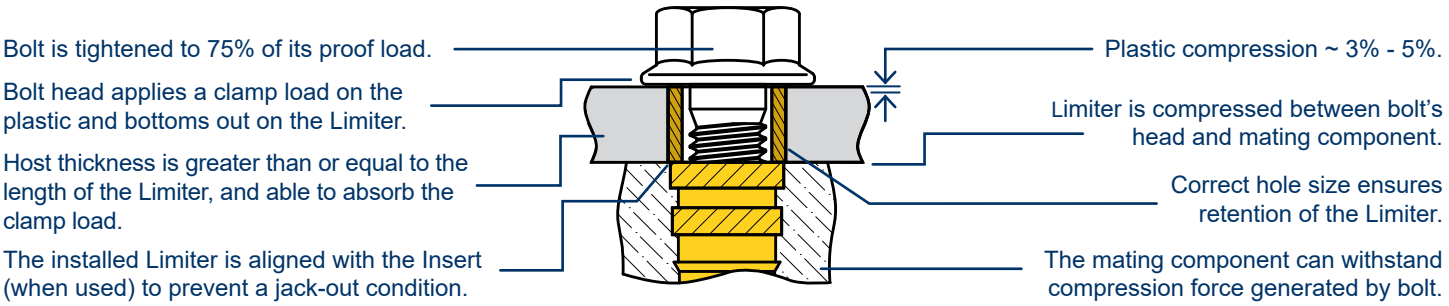

The following design guidelines should be considered when a Compression Limiter is used to ensure its effectiveness in the plastic assembly:

- The length of the Compression Limiter should be equal to or slightly less than the host thickness such that there is a small amount of plastic compression after the bolt is torqued. If the plastic is not compressed, the host may move about the Limiter.

- The bearing surface beneath the bolt's head or washer must extend over the Compression Limiter to contact the plastic component to avoid plastic creep and ensure bolted joint integrity over the life of the assembly. Methods that can be used to achieve this include the use of a flanged bolt, washer or headed Compression Limiter. A washer may be preferred in lower volume and or/non-serviced applications. In higher volume, automated and/or serviceable applications, a non-headed Compression Limiter with a flanged bolt is the easiest to assemble and provides the lowest total cost.

- The amount of material compressed under the bolt's head varies depending on the application's loading and plastic properties. This area of compression must be large enough to withstand forces attempting to pull the assembly apart, yet small enough to allow sufficient plastic compression so that the Compression Limiter contacts both the bolt and the mating component.

- For any given bolt size and class/grade, the recommended clamp load is 25%-75% of the proof load. (Reference page 5)

- It is imperative that the component mating against the Compression Limiter can withstand the compression force generated by the bolt.

- When using an Insert in the mating component, it is essential for the Compression Limiter to be in contact with the face of the Insert to avoid pulling the Insert out of the plastic assembly (jack-out). The Insert must also be able to withstand the load generated by the bolt.

Galvanic compatibility of the materials within the assembly should be considered when an electrolyte is present. Theoretically, galvanic corrosion can be prevented by use of similar metals on the anodic scale and separating dissimilar metals by use of electrical insulators. In reality, protection is difficult to achieve as it is difficult to always use similar metals or provide complete protection from the elements. It is important to consider other measures to minimize the effect of galvanic corrosion. The following factors should be considered:

- Protect the metallic parts from the environment. Without an electrolyte, galvanic corrosion cannot occur.

- Avoid combinations of dissimilar metals that are far apart on the anodic index. For harsh environments such as outdoor use, materials should be within 0.15V, and in warehouses and other uncontrolled indoor environments materials should be within 0.25V. In temperature and humidity controlled environments, materials can be as far apart as 0.50V.

- Avoid small anodes and large cathodes as this increases the corrosion rate of the anode.

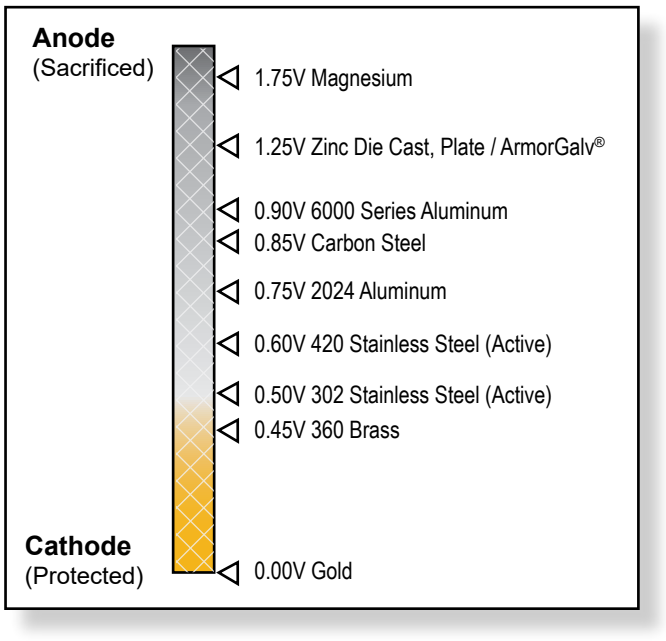

SPIROL® SPLIT SEAM – COMPRESSION LIMITERS

Series CL220



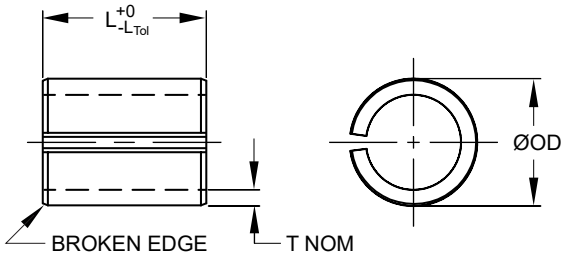

MATERIAL
B High Carbon Steel

FINISH
H ArmorGalv®

DIMENSIONAL DATA

NOMINAL BOLT SIZE ▸		M4	M5	M6	M8	M10	M12
Min. ØID Installed		5.0	6.0	7.0	9.0	11.0	13.0
Wall Thickness "T"		0.85	1.00	1.10	1.50	1.85	2.25
Length Tolerance "L_{Tol}"		0.15	0.15	0.15	0.20	0.25	0.25
Outer Diameter ØOD		7.17/7.34	8.47/8.64	9.67/9.89	12.52/12.79	15.27/15.59	18.07/18.44
Recommended Ø Hole Size		7.00/7.10	8.30/8.40	9.50/9.60	12.35/12.45	15.10/15.20	17.90/18.00
LENGTH	6						
	8						
	10						
	12						
	15						
	20						
	25						
	30						

- CL220 rated for use up to ISO Class 8.8 bolts.
- Special lengths and sizes available upon request.
- *Please reference pages 4-8 for design considerations and guidelines.*

SPIROL® Split Seam Compression Limiters
can be installed with SPIROL Installation Equipment or simply pressed in.

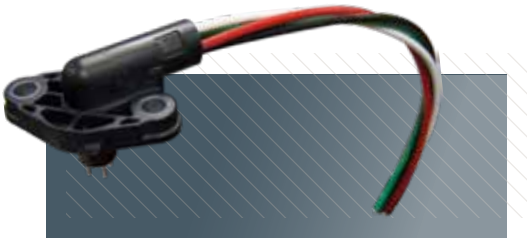

To Order: CMPL, Nominal Bolt Diameter, Length, Material, Finish, Series
Example: CMPL 6 X 6 BH CL220

What is ArmorGalv®?

ArmorGalv® is a zinc alloy thermal diffusion coating covered by ASTM A1059M-08(2013). ArmorGalv® provides uniform deposition of coating on all surfaces of the part. There are no insignificant surfaces and the entire inner diameter receives full coating and protection. ArmorGalv® and two complimentary sealers offers a minimum of 1,000 hours corrosion resistance to red rust, and is an ideal coating for some of the most aggressive environments such as marine, automotive, mining, agriculture and industrial manufacturing.

SPIROL is a licensee of ArmorGalv®, a registered trademark of Distek N.A LLC



ArmorGalv® Coated

Electroplated Zinc

SPIROL® SPLIT SEAM – SLIM PROFILE COMPRESSION LIMITERS

Series CL200



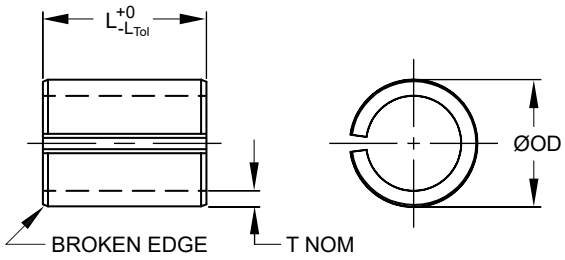

MATERIAL
B High Carbon Steel

FINISH
T Trivalent Zinc Plated

DIMENSIONAL DATA

NOMINAL BOLT SIZE ▶		M4	M6	M8
Min. ØID Installed		4.5	6.5	8.5
Wall Thickness "T"		0.85	1.10	1.50
Length Tolerance "L_{Tol}"		0.15	0.15	0.20
Outer Diameter ØOD		6.65/6.75	9.15/9.33	11.90/12.20
Recommended Ø Hole Size		6.50/6.60	9.00/9.10	11.75/11.85
LENGTH	8			
	10			
	12			
	15			
	20			
	25			

- All dimensions apply prior to plating. *Thicker finishes, such as ArmorGalv® and dip coatings, may require adjusted dimensions to ensure form, fit and function. Please consult SPIROL Engineering if considering these types of finishes for the CL200.*
- CL200 rated for use up to ISO Class 8.8 bolts.
- Heat treated versions available to order for use up to ISO Class 12.9/Grade 8 bolts.
- Special lengths and sizes available upon request.
- *Please reference pages 4-8 for design considerations and guidelines.*



SPIROL® Split Seam Compression Limiters
can be installed with SPIROL Installation Equipment or simply pressed in.

To Order: CMPL, Nominal Bolt Diameter, Length, Material, Finish, Series
Example: CMPL 10 X 12 BT CL200

SPIROL® SPLIT SEAM – HEAVY WALL COMPRESSION LIMITERS

Series CL350



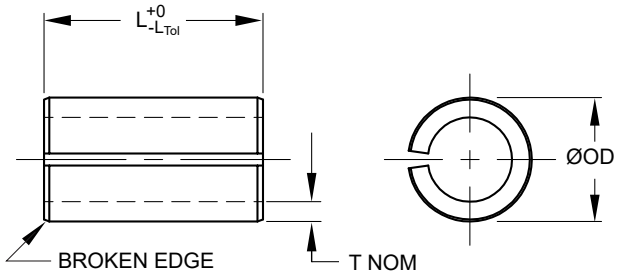

MATERIAL
B High Carbon Steel

FINISH
T Trivalent Zinc Plated

DIMENSIONAL DATA - METRIC

NOMINAL BOLT SIZE ▶		M6	M8
Min. ØID Installed		6.8	8.8
Wall Thickness "T"		1.50	2.00
Length Tolerance "L_{Tol}"		0.15	0.20
Outer Diameter ØOD		10.08/10.28	13.25/13.52
Recommended Ø Hole Size		9.95/10.05	13.05/13.20
LENGTH	10		
	12		
	15		
	20		
	25		

- All dimensions apply prior to plating.
- CL350 rated for use up to ISO Class 10.9 bolts.
- Special lengths and inch sizes available upon request.
- *Please reference pages 4-8 for design considerations and guidelines.*

SPIROL® Split Seam Compression Limiters
can be installed with SPIROL Installation Equipment or simply pressed in.



To Order: CMPL, Nominal Bolt Diameter, Length, Material, Finish, Series
Example: CMPL 6 X 15 BT CL350

SPIROL® SPLIT SEAM – OVAL COMPRESSION LIMITERS

Series CL400



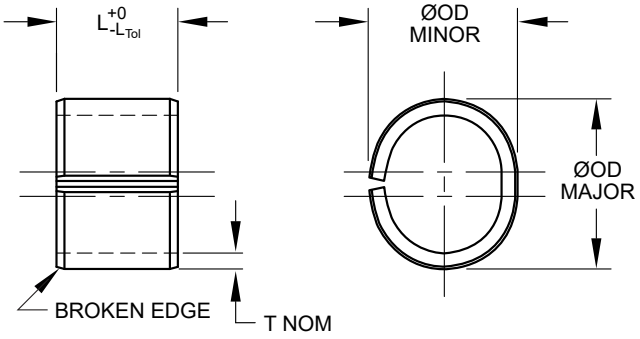

MATERIAL
B High Carbon Steel

FINISH
T Trivalent Zinc Plated

DIMENSIONAL DATA - METRIC

NOMINAL BOLT SIZE ▶		M6	M8
Min. ØID		6.8	8.8
Wall Thickness "T"		1.10	1.50
Length Tolerance "L_{Tol}"		0.15	0.20
Outer Diameter ØOD Major		11.45/11.70	14.30/14.60
Outer Diameter ØOD Minor		9.40/9.60	12.25/12.50
Recommended Ø Hole Size	H Major	11.55/11.70	14.45/14.60
	H Minor	9.20/9.30	12.05/12.15
LENGTH	8		
	10		
	12		
	15		
	20		

HOLE SPECIFICATIONS

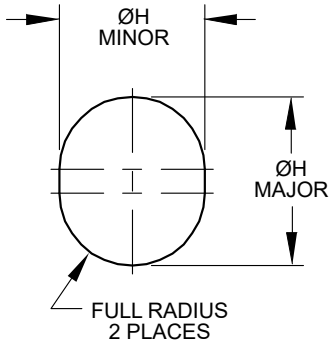

- All dimensions apply prior to plating.
- CL400 rated for use up to ISO Class 8.8 bolts.
- Special lengths and inch sizes available upon request.
- *Please reference pages 4-8 for design considerations and guidelines.*

SPIROL® Oval Split Seam Compression Limiters
can be installed with SPIROL Installation Equipment or simply pressed in.



To Order: CMPL, Nominal Bolt Diameter, Length, Material, Finish, Series
Example: CMPL 6 X 12 BT CL400

MOLDED-IN – OVAL COMPRESSION LIMITERS

Series CL460

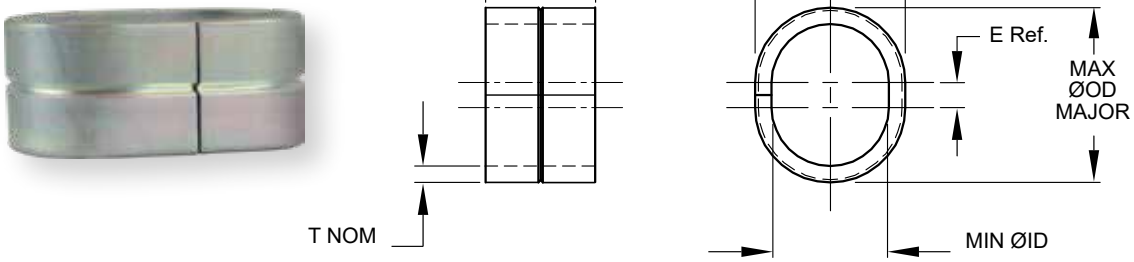

MATERIAL
B High Carbon Steel

FINISH
T Trivalent Zinc Plated

DIMENSIONAL DATA - METRIC

NOMINAL BOLT SIZE ▶		M6	M8
Min. ØID		6.8	8.8
Wall Thickness "T"		1.10	1.50
Elongation "E"		2.25	2.25
Length Tolerance "L_{Tol}"		0.15	0.20
Max. Outer Diameter ØOD Major		11.65	14.50
Max. Outer Diameter ØOD Minor		9.40	12.25
LENGTH	6		
	8		
	10		
	12		
	15		

- All dimensions apply prior to plating.
- CL460 rated for use up to ISO Class 8.8 bolts.
- Special lengths and inch sizes available upon request.
- *Please reference pages 4-8 for design considerations and guidelines.*

SPIROL® Oval Molded-In Compression Limiters can be molded in using industry standard core pins.



To Order: CMPL, Nominal Bolt Diameter, Length, Material, Finish, Series
Example: CMPL 8 X 10 BT CL460

SPIROL® MOLDED-IN COMPRESSION LIMITERS

Series CL500



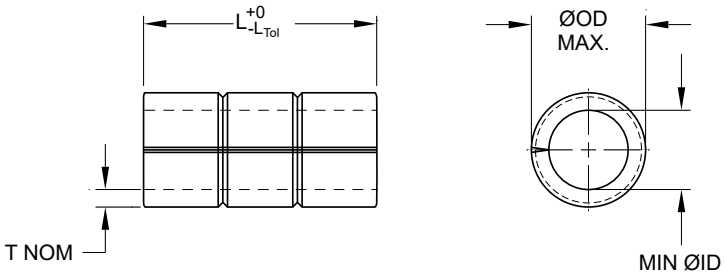

Parts less than 20mm (.750") long will have a single groove.

MATERIAL
F Low Carbon Steel

FINISH
T Trivalent Zinc Plated

DIMENSIONAL DATA - METRIC

NOMINAL BOLT SIZE ▶		M6	M8
Min. ØID		6.8	8.8
Wall Thickness "T"		1.50	2.00
Length Tolerance "L_{Tol}"		0.15	0.20
Outer Diameter ØOD Max.		10.25	13.25
LENGTH	10		
	12		
	15		
	20		
	25		

DIMENSIONAL DATA - INCH

NOMINAL BOLT SIZE ▶		#10	1/4	5/16
Min. ØID		.221	.281	.344
Wall Thickness T		.043	.059	.078
Length Tolerance "L_{Tol}"		.006	.006	.008
Outer Diameter ØOD Max.		.323	.417	.518
LENGTH	.312			
	.375			
	.500			
	.625			
	.750			
	1.000			

- All dimensions apply prior to plating.
- CL500 rated for use up to ISO Class 8.8/Grade 5 bolts.
- Special lengths and sizes available upon request.
- *Please reference pages 4-8 for design considerations and guidelines.*

SPIROL® Molded-In Compression Limiters can be molded in using industry standard core pins.



To Order: CMPL, Nominal Bolt Size x Length, Material, Finish, Series
Example: CMPL 6 X 20 FT CL500

PRECISION MACHINED – ALUMINUM COMPRESSION LIMITERS



Series CL6000
Knurled

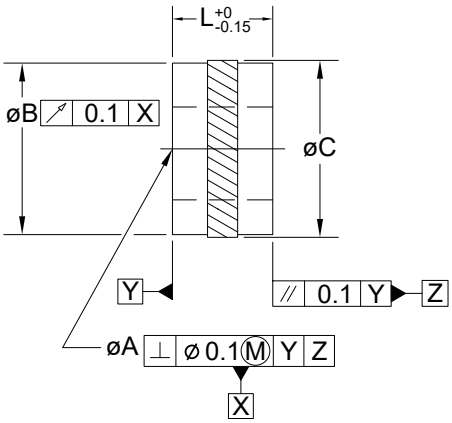

Series CL6100
Headed

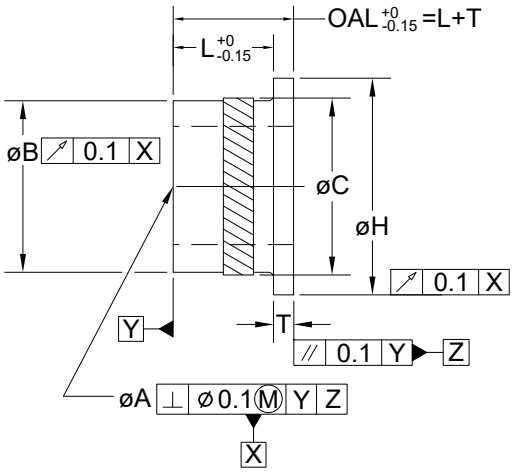

MATERIAL
A Aluminum

FINISH
K Plain

DIMENSIONAL DATA

NOMINAL BOLT SIZE ▸		M3	M4	M5	M6	M8	M10
Inner Diameter ØA		4.05/4.15	5.05/5.15	6.05/6.15	7.05/7.15	9.05/9.15	11.05/11.15
Body Diameter ØB		5.42/5.58	6.95/7.11	8.47/8.63	10.00/10.16	13.36/13.52	16.72/16.88
Knurl Diameter ØC Nom.		5.83	7.38	8.88	10.43	13.78	17.13
Head Diameter ØH		7.35/7.60	8.95/9.20	10.55/10.80	12.15/12.40	15.35/15.60	18.95/19.20
Head Thickness "T" Ref.		1.00	1.00	1.00	1.25	1.25	1.25
Recommended Ø Hole Size		5.61/5.69	7.14/7.22	8.64/8.72	10.19/10.27	13.54/13.62	16.89/16.97
LENGTH	3						
	4						
	5						
	6						
	8						

- CL6000 / CL6100 rated for use up to ISO Class 10.9 bolts.
- The knurl will always be larger than the maximum hole.
- Additional diameters and special lengths available upon request.
- Available in inch sizes - made to order.
- *Please reference pages 4-8 for design considerations and guidelines.*

SPIROL® Knurled CL6000 and CL6100 Compression Limiters are perfect for press-in and molded-in applications - including highly automated assembly processes.



To Order: CMPL, Nominal Bolt Size x Length, Material, Finish, Series
Example: CMPL 6 X 8 AK CL6100

SPIROL® PRECISION MACHINED – BRASS COMPRESSION LIMITERS



Series CL8000
Knurled

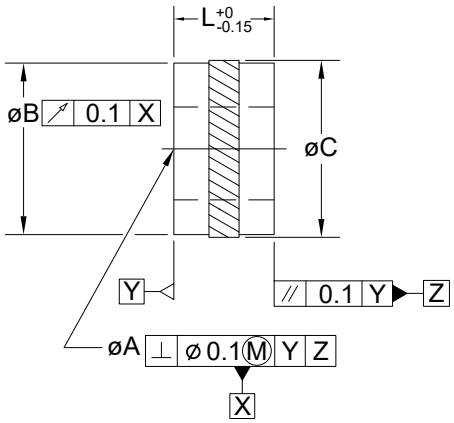

Series CL8100
Headed

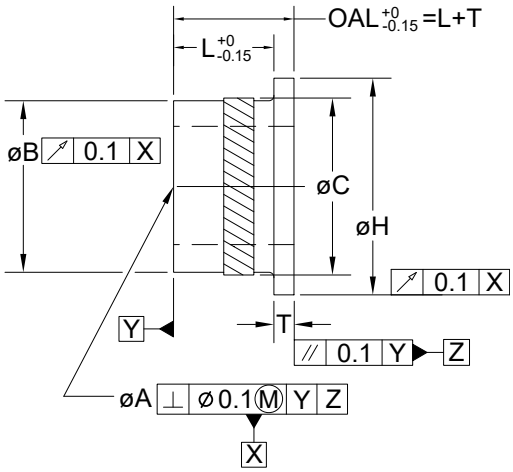

MATERIAL
E Brass

FINISH
K Plain

DIMENSIONAL DATA

NOMINAL BOLT SIZE ▸		M3	M4	M5	M6	M8	M10
Inner Diameter ØA		4.05/4.15	5.05/5.15	6.05/6.15	7.05/7.15	9.05/9.15	11.05/11.15
Body Diameter ØB		6.03/6.19	7.56/7.72	9.09/9.25	10.92/11.08	14.58/14.74	17.95/18.11
Knurl Diameter ØC Nom.		6.45	7.97	9.50	11.34	15.01	18.36
Head Diameter ØH		7.75/8.00	9.35/9.60	10.95/11.20	13.35/13.60	17.35/17.60	20.45/20.70
Head Thickness "T" Ref.		1.00	1.00	1.00	1.25	1.25	1.25
Recommended Ø Hole Size		6.22/6.30	7.73/7.81	9.26/9.34	11.10/11.18	14.77/14.85	18.12/18.20
LENGTH	3						
	4						
	5						
	6						
	8						

- CL8000 / CL8100 rated for use up to ISO Class 10.9 bolts.
- The knurl will always be larger than the maximum hole.
- Additional diameters and special lengths available upon request.
- Available in inch sizes - made to order.
- *Please reference pages 4-8 for design considerations and guidelines.*

SPIROL® Knurled CL8000 and CL8100 Compression Limiters are perfect for press-in and molded-in applications - including highly automated assembly processes.



To Order: CMPL, Nominal Bolt Size x Length, Material, Finish, Series
Example: CMPL 5 X 6 EK CL8000

GENERAL PURPOSE – ALUMINUM COMPRESSION LIMITERS

Series CL620
Knurled



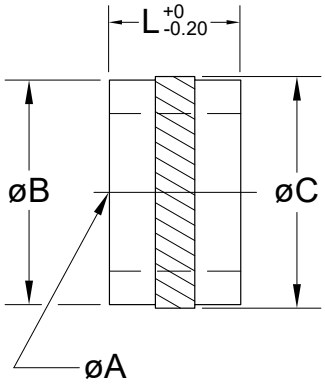

MATERIAL
A Aluminum

FINISH
K Plain

DIMENSIONAL DATA

NOMINAL BOLT SIZE ▶		M3	M4	M5	M6	M8
Inner Diameter ØA		4.05/4.15	5.05/5.15	6.05/6.15	7.05/7.15	9.05/9.15
Body Diameter ØB		5.42/5.58	6.95/7.11	8.47/8.63	10.00/10.16	13.36/13.52
Knurl Diameter ØC Nom.		5.78	7.32	8.82	10.38	13.72
Recommended Ø Hole Size		5.60/5.68	7.13/7.21	8.64/8.72	10.18/10.26	13.53/13.61
LENGTH	3					
	4					
	5					
	6					
	8					

- CL620 rated for use up to ISO Class 10.9 bolts.
- The knurl will always be larger than the maximum hole.
- Additional diameters and special lengths available upon request.
- Brass alternative available - made to order with alternate dimensions.
- *Please reference pages 4-8 for design considerations and guidelines.*

SPIROL® Knurled CL620 Compression Limiters
can be either pressed-in or overmolded into the assembly.



To Order: CMPL, Nominal Bolt Size x Length, Material, Finish, Series
Example: CMPL 6 X 8 AK CL620

SPIROL®

Innovative Fastening Solutions. Lower Assembly Costs.



Coiled Spring Pins



Slotted Spring Pins



Solid Pins



Alignment Dowels / Bushings

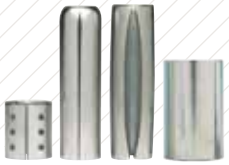

Spacers & Rolled Tubular Components

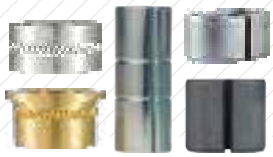

Compression Limiters



Threaded Inserts for Plastics



Disc Springs



Machined Aerospace Components



Precision Shims, Washers & Metal Gaskets



Laminated Shims



Parts Feeding Technology



Pin Installation Technology



Insert Installation Technology



Compression Limiter Installation Technology

*Please refer to **www.SPIROL.com** for current specifications and standard product offerings.*

SPIROL offers complimentary Application Engineering support! We will assist on new designs as well as help resolve issues, and recommend cost savings on existing designs. Let us help by visiting **Application Engineering Services** on **SPIROL.com**.

© 2025 SPIROL International Corporation 10/25

Technical Centers

Americas

SPIROL International Corporation
Connecticut, USA
+1 860 774 8571
info@spirol.com

SPIROL Shim Division
Ohio, USA
+1 330 920 3655
info@spirol.com

SPIROL Canada
Windsor, Ontario
+1 519 974 3334
info-ca@spirol.com

SPIROL Mexico
Apodaca, Nuevo León
+52 81 8385 4390
info-mx@spirol.com

SPIROL Brazil
Indaiatuba, São Paulo
+55 19 3936 2701
info-br@spirol.com

Europe

SPIROL United Kingdom
Corby, Northants, England
+44 (0) 1536 444800
info-uk@spirol.com

SPIROL Ford
South Shields, Tyne & Wear, England
+44 (0) 1914 540141
contactus@ford-engineering.com

SPIROL France
Saint-Léonard
+33 (0) 3 26 36 31 42
info-fr@spirol.com

SPIROL Germany
Münich
+49 (0) 89 4 111 905 71
info-de@spirol.com

SPIROL Spain
Barcelona
+34 932 71 64 28
info-ib@spirol.com

SPIROL Czech Republic
Tuchoměřice
+420 226 218 935
info-cz@spirol.com

SPIROL Poland
Warsaw
+48 510 039 345
info-pl@spirol.com

Asia Pacific

SPIROL China
Shanghai
+86 (0) 21 5046-1451
info-cn@spirol.com

SPIROL Malaysia
Iskandar Puteri, Johor
+60 77 063 960
info-my@spirol.com

SPIROL Korea
Seoul, South Korea
+82 (0) 10 9429 1451
info-kr@spirol.com

SPIROL.com