RAK-FEELING - MP13504A - MATT BLACK

Sospeso | WC

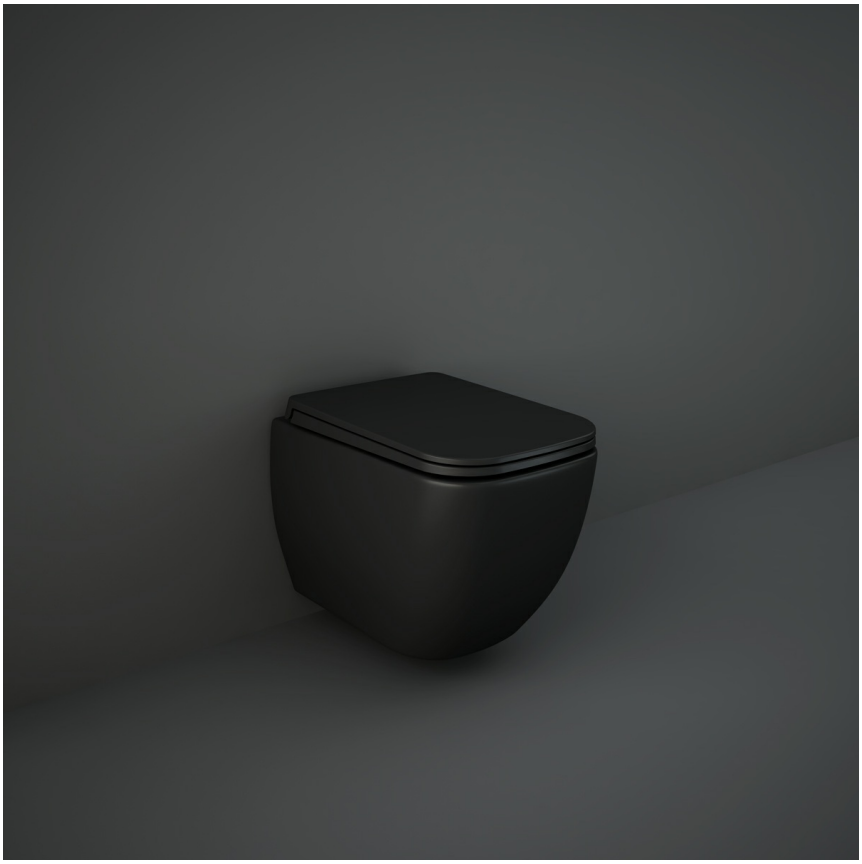

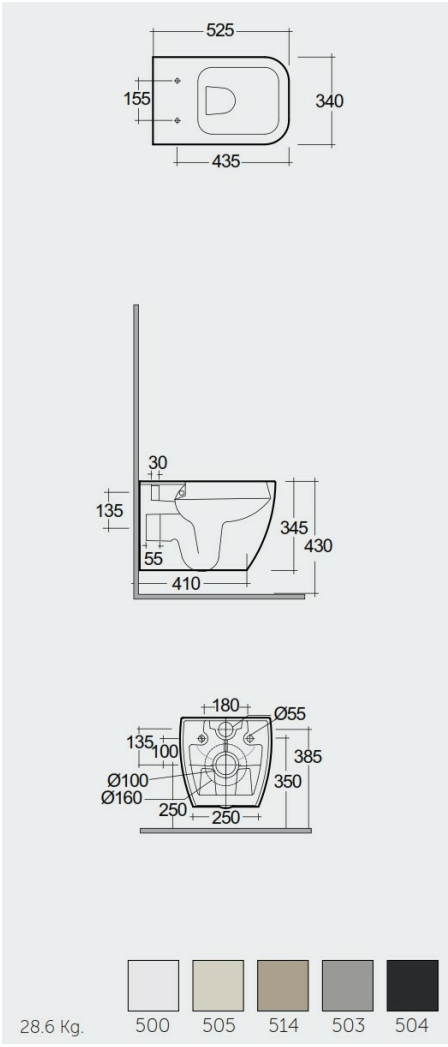

SCHEDA TECNICA

Suite:	RAK-FEELING WC'S & BIDETS
Tipo:	Sospeso
Dimensioni:	525 x 340 mm
Peso:	28.6 Kg
Colore:	
Tipo di scarico:	A parete
Sifone:	Nascosto
Opzioni sedile:	Urea
Forma:	Rettangolare Arrotondata
Soft close:	sì
Coperchio removibile:	sì
Scarico:	Doppio scarico
Flush Capacity:	4.5-3 L

Codice	Nome
MPSC3901504	RIMLESS BACK TO WALL WATER CLOSET P & S TRAP 52 CM - MATT BLACK
MP13504A	RIMLESS WALL HUNG WATER CLOSET 52 CM WITH HIDDEN FIXATIONS - MATT BLACK

Dimensions: All dimensions in mm. Tolerance of vitreous china & fireclay items: ± 5% for below 200mm and ± 3% for above 200mm; for all other items tolerance ± 1%. Note: Due to a continuing development program to improve design and performance, the manufacturer reserves all rights to vary specifications without prior information. Please note accessories are for photographic use only.