RAK-ORIGIN

Lavabo | Colonna



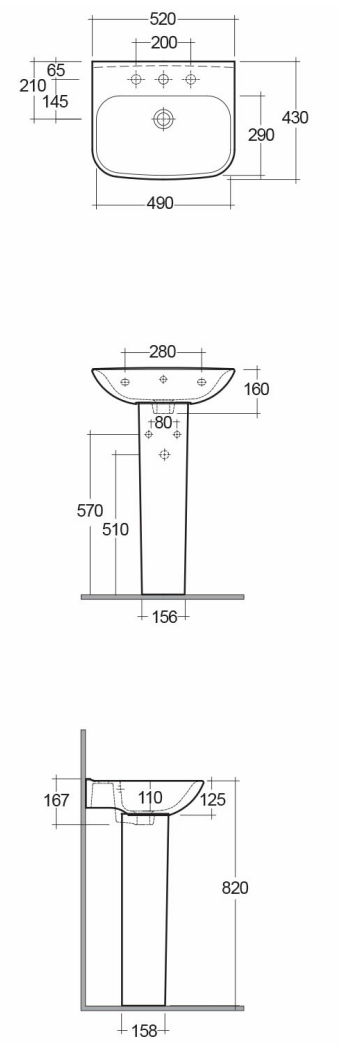

SCHEDA TECNICA

Suite:	RAK-ORIGIN
Tipo:	Colonna
Dimensioni:	520 x 430 mm
Peso:	22 Kg
Colore:	bianco alpino
Forma:	Rettangolare Arrotondata
Overflow hole:	sì

Codice	**Nome**
ORG0801AWHA	ORIGIN WASH BASIN 52CM
CY02AWHA	CAROLINE PEDESTAL

Dimensions: All dimensions in mm. Tolerance of vitreous china & fireclay items: ± 5% for below 200mm and ± 3% for above 200mm; for all other items tolerance ± 1%. Note: Due to a continuing development program to improve design and performance, the manufacturer reserves all rights to vary specifications without prior information. Please note accessories are for photographic use only.